# House (Villa) Powerwall ESS

**Off-grid / Hybrid Energy System All In One Solution**

5 KWH

## House Made Smart BMS Technologies

48V / 24V optional

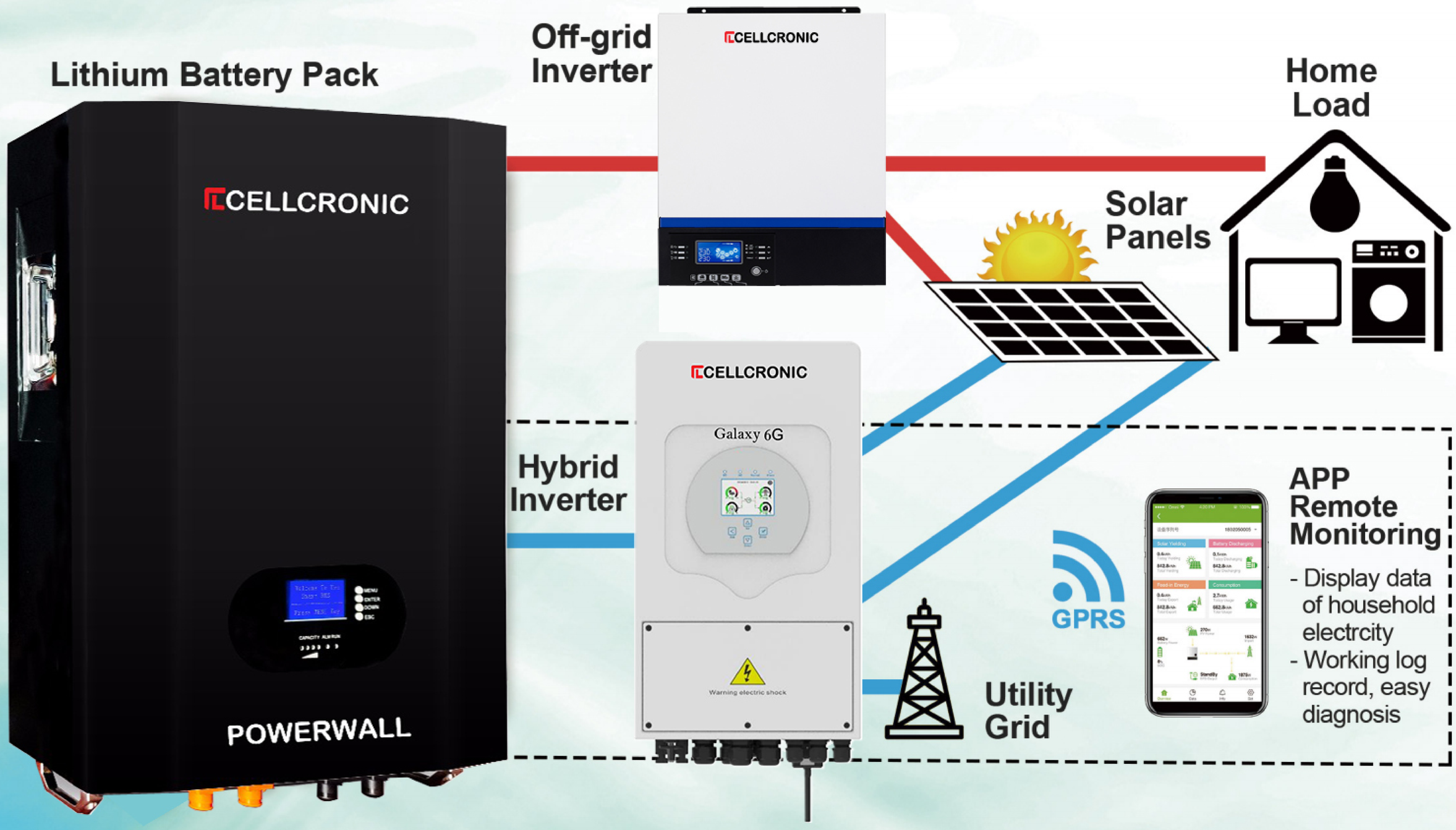


**Package Accessories:** Lithium Battery Pack; Cable Kits;
Off-grid / Smart Hybrid Builtin Controller Inverter (Optional)

**10 Years Warranty**

SAA CE RoHS ISO UN38.3 MSDS

## SIMPLE PLUG AND USE

| graphene | 6000 cycles | Safety design | APP optional | RS485 | parallel | |
|---|---|---|---|---|---|---|
| Super Graphene Lithium Cells | Heavy-Duty Long Cycle Life @80%DOD | Smart Elite BMS, Super Safety Design | WiFi APP Easy Management | RS485 & RS232 Port Communication | Parallel Powerwall Supported | Easy Use Drop-in Replacement of bead acid battery |

CELLCRONIC

CE RoHS ISO UN38.3 MSDS

**Cellcronic Technolohies Pvt. Ltd.**

Email: contact@cellcronic.com

URL: www.cellcronic.com

CELLCRONIC

The Smart & Green Energy

# Complete Energy Storage System Solution (BESS)




**48V 240AH**

**TELECOM / SOLAR SYSTEM / ELECTRICITY / UPS**

CELLCRONIC

The Smart & Green Energy

# Complete Energy Storage System Solution(BESS)

**Telecom**
**Solar System**
**Electricity, UPS**

## 48V 50Ah

## 48V 100Ah

## 48V 200Ah

## 48V LiFePO4 Series Modules Basic Parameters

| Model | 48V 20Ah | 48V 50Ah | 48V 100Ah | 48V 200Ah |
|---|---|---|---|---|
| Apply to Mechanical Height (mm) | 1U(442*385*44) | 3U(442*385*132) | 5U(442*420*220) | 5U(442*450*250) |
| Approx Weight (kg) | 13 | 35 | 62 | 90 |
| Cycle Life | ≥4000 cycles (100%DOD) | | | |
| Communication Functions | including RS232/RS485, CAN, SNMP and Ethernet, etc | | | |

★ Contact Cellcronic for details of 48V Models and Application solutions

## Integrate of System Design

### # House Made Smart BMS Technologies

# Smart Battery balanced management;
# High-precision voltage detection;
# Smart charging and discharging management the FCC capacity automatic learning;
# High-precision current detection;
# 5-channel battery temperature detection channel;
# Hardware and software over-voltage, low-voltage, under-voltage, over-current, high and low temperature and short circuit protection;
# Compatible the RS232/RS485,CAN, Bluetooth, SNMP and Ethernet, etc;
# Module size to meet the requirements of standard rack, easy to install;

**Internal Structure Reference**

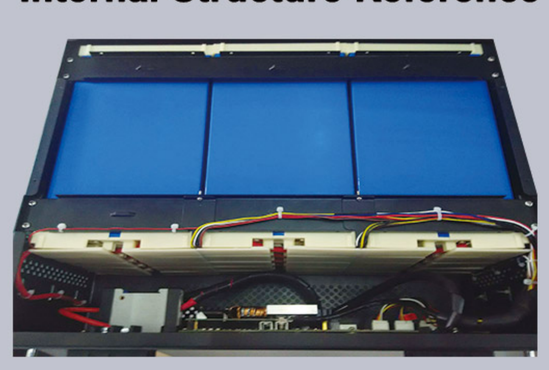

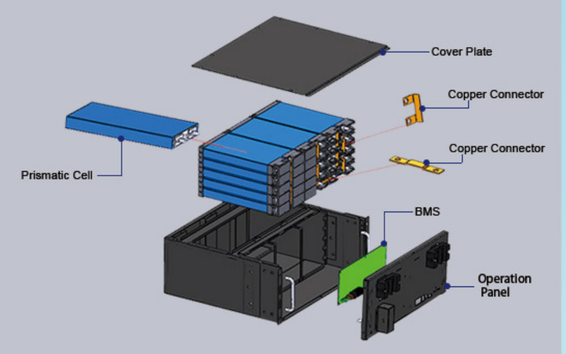


## System Diagram of Lithium Module and BMS

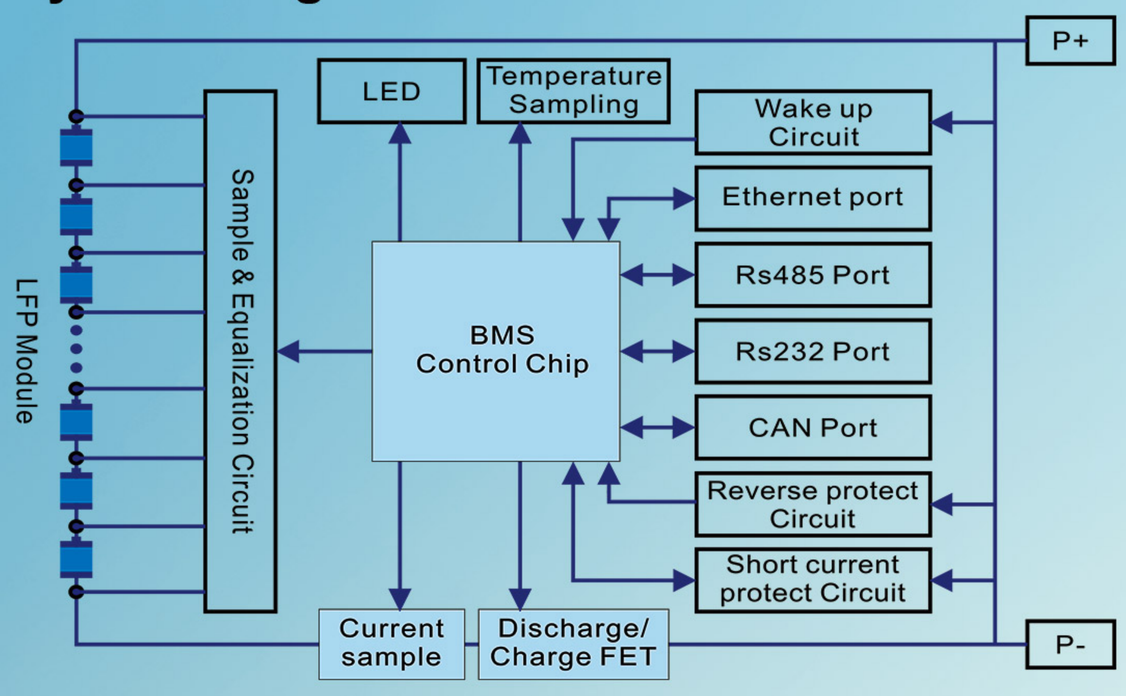

CELLCRONIC

CE RoHS ISO UN38.3 MSDS


**Cellcronic Technolohies Pvt. Ltd.**

Email: contact@cellcronic.com

URL: www.cellcronic.com